ISSN 2395-1621

Colour Sensing Based Robotic Goalkeeper

#1Hemant, #2Mohini Gore, #3Supriya Ghule, #4Kranti Adsul,
#5Prof. Alaknanda Patil

1hemant.hemantkumar.kumar1@gmail.com,
2mohinigore26@gmail.com,
3supriyaghule93@gmail.com,
4krantiadsul04@gmail.com,
5patilalaknanda@yahoo.com

#12345Electronics and Telecommunication Department
Savitribai Phule Pune University, Padmbhushan Vasantdada Patil Institute Of Technology, Pune, Maharashtra, India

ABSTRACT

The robot arm is an ongoing computer vision project for which many enhancements have been done during the last years. The aim of the paper is to present a system for controlling a robot arm, based on image processing and recognition. In this paper a project is proposed to act as a robotic goal keeper which obstructs the ball that is kicked towards it. The controller used is a PIC Microcontroller having high speed performance, low cost and 32K bytes program memory. It communicates with colour sensors and various motor modules in real time to detect the right colour object and to control the arm movement.

KEYWORDS: - Robotic arm, Microcontroller, Colour sensor, Servo motors

ARTICLE INFO

Article History

Received: 20th May 2017

Received in revised form : 20th May 2017

Accepted: 25th May 2017

Published online : 26th May 2017

I. INTRODUCTION

The importance of robotics in 21st century is increasing day by day to reduce human mistakes in their daily tasks because of their ability to do much difficult tasks; the automotive industry fully operates with robots completing tasks on time without any mistake. The "Rancho Arm" was designed in 1963 to assist handicapped persons. Revolution in the robotics has opened the way to help the handicapped people so that they can reclaim the use of lost limbs. By 1969 more robotics arm were developed and controlled through computer such as Stanford arm was robotics arm this respect.

The proposed system is an embedded system which is used as a robotic football goalkeeper which will defend any football kicked towards it. We have taken the colour of the ball as red. So now only red colour ball will be defended by the robotic goalkeeper and other colour balls will not be detected and will not be defended

II. METHODOLOGY

Robotic goalkeeper is basically a robotic arm which will act as a goalkeeper to obstruct the ball that is kicked towards it. To detect the ball that is kicked towards it we are using a camera as a colour sensor. This camera will be used for detection of the ball, position of the ball on the ground near the robotic goalkeeper. The camera is placed directly above the ground so as to cover the maximum part of the ground. The images which are captured by the camera are continuously sent to the matlab program which will use this data to find the position of the football. After finding the football the function will send the signals to the micro controller.

As the signals will be received the microcontroller will send signals to the stepper motors through the motor driver IC. These signals will control the servo motors to obstruct the football that is kicked towards it. Like this the robotic goalkeeper will work.

The movement of the robotic goal keeper is dependent on how fast the camera detects the position of the ball and send the signals according to it. It also depends on how fast the servo motor responds to the signal that is set to it and also how preciously it reacts to the signal.

III. PROPOSED SYSTEM

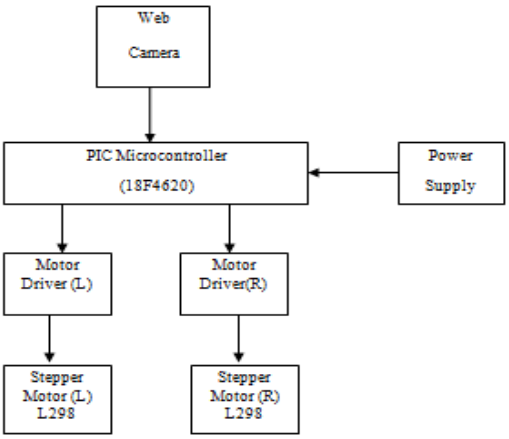

Fig 1: Block diagram of proposed system

The working model of the project is divided in to different sections like detection control section, mechanical assembly and working.

Different mechanisms can be used for detection of the object. For trial run of the project the colour based detection has been selected. Since the optical sensors are used without much processing of the input data the sensing is done at a faster rate.

The colour sensor itself provide direct signal to the microcontroller after detecting the object. The main operation of the microcontroller is limited to servo motor control and the overall response is expected to be better. The L293 driver ICs are used to drive the DC servo motors. The drivers are fast enough to deliver the pulses at required speed to the motors.

IV. FLOW CHART

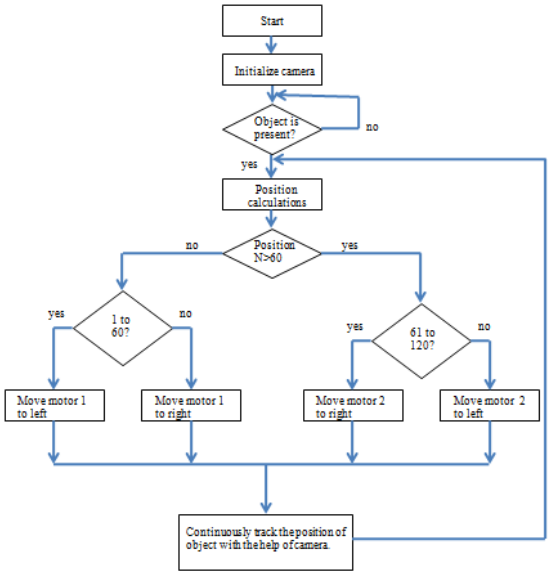

Fig 2: Flow chart

The function of robotic arm in the form of flow chart is shown in figure 2. In starting the camera detects whether there is an object is in its frame or not, if not it remains as it is and if there is a object of predefined colour the is start capturing the images of the object continuously.

The frame of the camera is divided in 120 parts. These 120 parts are the grouped. According these partitions the position of the object is found out. After finding the object position the signal is sent to respected left or right motor for obstructing the object.

V. DESIGN AND WORKING

5.1 CIRCUIT DIAGRAM

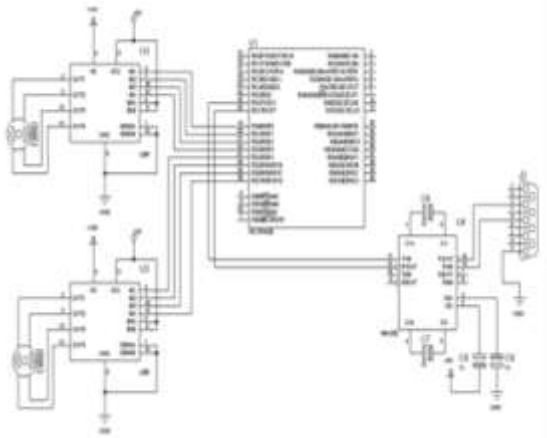

Fig 3: Main circuit diagram

5.2 WORKING OF SYSTEM

Fig 4: Working model

Camera is mounted on the upper side and it continuously checks for ball's presence. As soon as the ball is detected in the frame of camera, the camera starts tracking its position continuously. The pixel value of each pixel is compared with a threshold value defined in the code. After the detection of the red pixels all the red pixels are connected to form a blob. In this way blob is detected. The function used for connection of red pixels is bbox(). The complete frame

width is divided into 120 positions. So there are four conditions which are mentioned in the algorithm for predicting the path of the ball coming towards the robotic arm.

By using this information processor comes to know the position of the ball at each point of time. These positions are supplied to the controller using a serial to USB converter cable. These positions are then compared with the conditions stated in the code and finally the robotic arm is moved according to the instructions given by the microcontroller. The conditions can be understood in the flow chart shown in figure2.

VI. HARDWARE DESCRIPTION

Different components were used in this project. List of the components used in this project are:

6.1 PIC18F4620 MICROCONTROLLER

PIC18F4620 IC is available in 28, 40 and 44 pin IC.PIC is a family of Harward architectures microcontrollers made by microchip technology. It uses flash memory for program storage. The hardware capability of PIC devices range from 8 pin DIP chips up to 100-pin SMD with discrete I/O pins, ADC and DAC module, and communication ports such asUART,I2C,and even USB

- Four Crystal modes, using crystals or ceramic resonators.

- Two External Clock modes, offering the option of using two pins (oscillator input and a divide-by-4 clock output) or one pin (oscillator input, with the second pin reassigned as general I/O).

- Two External RC Oscillator modes with the same pin options as the External Clock modes.

- An internal oscillator block which provides an 8 MHz clock and an INTRC source (approximately 31 kHz), as well as a range of 6 user-selectable clock frequencies, between 125 kHz to 4 MHz, for a total of 8 clock frequencies. This option frees the two oscillator pins for use as additional general purpose I/O.

- A Phase Lock Loop (PLL) frequency multiplier, available to both the High-Speed Crystal and Internal Oscillator modes, which allows clock speeds of up to 40 MHz used with the internal oscillator, the PLL gives users a complete selection of clock speeds, from 31 kHz to 32 MHz – all without using an external crystal or clock circuit.

6.2 MOTOR DRIVER

The L298 is an integrated monolithic circuit. It is a high voltage, high current dual full-bridge driver de-signed to accept standard TTL logic levels and drive inductive loads such as relays, solenoids, DC and stepping motors. Two enable inputs are provided to enable or disable the device independently of the input signals. The emitters of the lower transistors of each bridge are connected together and the corresponding external terminal can be used for the connection of an external sensing resistor. An additional supply input is provided so that the logic works at a lower voltage.

6.3 POWER SUPPLY

There are many types of power supply such as SMPS, UPS. Most are designed to convert high voltage AC mains electricity to a suitable low voltage supply for electronic circuits and other devices. We are using SMPS which is high quality 5V, 3Amp SMPS intended for industrial use. We use these SMPS for robotics applications. Overload and over-voltage protection is provided. It can withstand input of 1500V AC up to 60 seconds. Output voltage can be adjusted by up to +-10% of the output voltage.

6.4 STEPPER MOTORS

A brushless, synchronous motor that exchanges digital pulses into mechanical rotation of shaft is called stepper motor. The stepper motor's revolution is divided into a discrete number of steps, almost 200 steps in each revolution and sends a separate pulse for each step includes the same size. Since each pulse of the step causes the motor to rotate an angle of 1.8^{o}, the position of the motor can be controlled without providing any feedback mechanism. As the frequency of the digital pulses increases, the movement of the steps also increases causing continuous rotation with the speed of rotation proportional to the frequency of pulses. Due to their low price, high potential torque at low speeds, high reliability and a simple rugged construction, stepper motors are used daily in both industrial and commercial applications.

VII. SOFWARES

7.1 MATLAB

MATLAB allows matrix manipulations, plotting of functions and data, implementation of algorithms, creation of user interfaces, and interfacing with programs written in other languages, including C, C++, Java, Fortran and Python.

Although MATLAB is intended primarily for numerical computing, an optional toolbox uses the MuPAD symbolic engine, allowing access to symbolic computing capabilities. An additional package, Simulink, adds graphical multi-domain simulation and Model-Based Design for dynamic and embedded systems.

This software has been used for the blob(ball) detection purpose. It also helps to obtain the position of the object in the frame of the camera.

7.2 PROTEUS

Proteus was used for the test run for the stepper motors for the stated conditions. It was observed that the code ran correctly and satisfied all the conditions.

Proteus was designed to be practical (easy to use, efficient, complete), readable and consistent.

Its strongest points are:

- Powerful string manipulation;
- Comprehensibility of Proteus scripts;
- Availability of advanced data structures: arrays, queues (single or double), stacks, bit maps, sets, AVL trees.

This software is used for schematic of circuit diagram. The circuit contains all the components and output of the circuit can be seen in the software virtually.

7.3 MPLAB

MPLAB is a free integrated development environment for the development of embedded applications on PIC and PIC microcontrollers, and is developed by Microchip Technology.

MPLAB X is the latest edition of MPLAB, and is developed on the NetBeans platform. MPLAB and MPLAB X support project management, code editing, debugging and programming of Microchip 8-bit, 16-bit and 32-bit PIC microcontrollers.

MPLAB is designed to work with MPLAB-certified devices such as the MPLAB ICD 3 and MPLAB REAL ICE, for programming and debugging PIC microcontrollers using a personal. PIC Kit programmers are also supported by MPLAB.

PIC microcontroller is used in this design. PIC programming can be done easily in MPLAB software.

7.4 EXPRESS PCB

There are many PCB designing software's are present in the market for example:-

- EAGLE.
- CADSTAR.
- PAD TO PAD.

Compared to these software EXPESS PCB is simple to use. It is used for PCB designing. The circuit diagram can be implemented into PCB artwork with the help of this software.

VIII. RESULTS

Object detection is the main part of this project. In the figure shown below there is a red ball which is detected by using Matlab function.

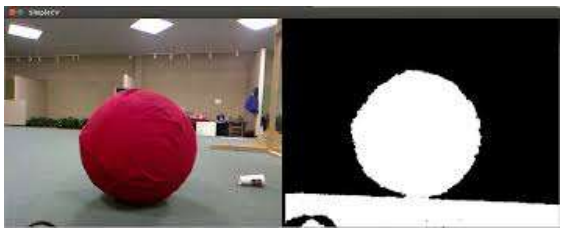

Fig 5: Bob detection

Fig 6: Calculated angle and XY coordinate of the object in the frame of the camera

IX. CONCLUSION

The designed prototype is able to detect the red coloured ball when it is in the frame of camera. And it can also obstruct the ball with the help of strips which are controlled by two stepper motors. This prototype is working as goal keeping robot.

REFERENCES

[1]. Arash Gholami , Abbas Dehghani and Mohamed Rehan Karim " Vehicle speed detection in video image sequences using CVS method " in International Journal of the Physical Sciences Vol. 5(17), pp. 2555-2563, 18 December, 2010

[2]. Yu, Ying-Hao Kwok, N. M., Ha, Q. P "FPGA Based Real Time Colour Tracking for Robotic Formation Control" in 2009 International Symposium on AUTOMATION and ROBOTICS in CONSTRUCTION (ISARC 2009), pp. 252-258 (2009)

[3]. Fumio Y, Wen L, Thuy TV (2008) "Vehicle Extraction and Speed Detection from Digital Aerial Images" in IEEE International Geosciences and Remote Sensing Symposium, pp. 1134-1137.

[4]. Abbas Dehghani and Ali Pourmohammad "Single Camera Vehicles Speed Measurement" in 2013 8th Iranian Conference on Machine Vision and Image Processing (MVIP)

[5] Asaad AMA, Syed IA (2009). "Object identification in video images using morphological background estimation scheme" Chapter, 22: 279-288.

[6] Kim, S., Lee, S.: "Object Tracking of Mobile Robot using Moving Color and Shape Information for the aged walking". International Journal of Advanced Science and Technology (IJACT), vol.2, pp. 293-297 (2008)

[7] Zhun, M., Jie, J., Zhang, G.: "Fast-moving target tracking system based on CMOS image sensor". In: Seventh International Symposium on Instrumentation and Control Technology, vol 7129, pp.6 (2008)

